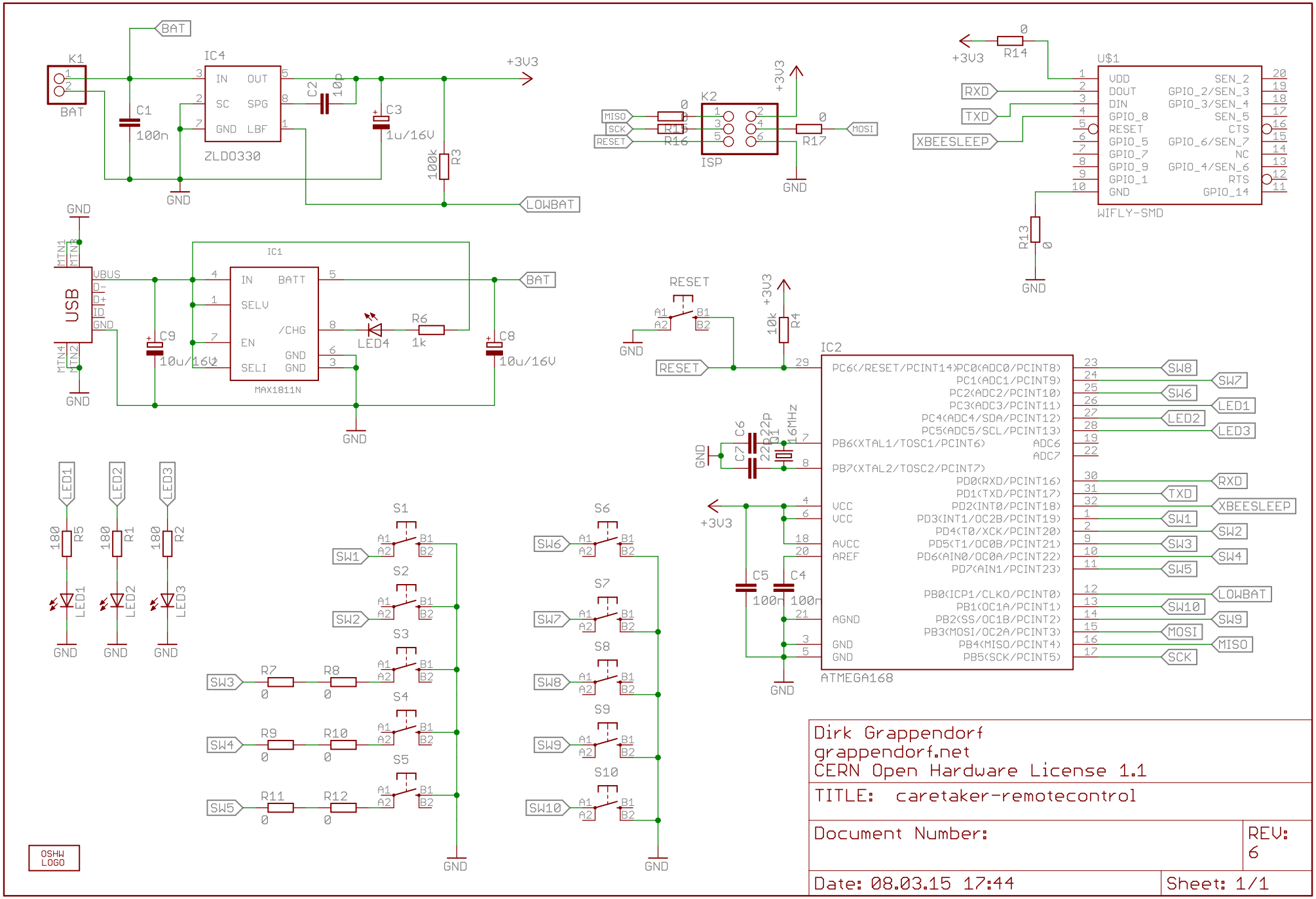

Dirk Grappendorf
grappendorf.net
CERN Open Hardware License 1.1

TITLE: caretaker-remotecontrol

Document Number:

REV: 6

Date: 08.03.15 17:44

Sheet: 1/1